DC axial fans & blowers with sensors

The DC fans and blowers of Japan Servo have a function to send an alarm signal when the fan motor revolutions slow down. Several systems are used to cut off the system power supply by this alarm signal, with three types of sensors available. Select the right type of sensor in accordance with the purpose of use. The lead wire for the sensor is yellow. The output type is an open collector output for all three types.

■ Sensor type

1. Lock detection type (Product code: S)

The output signal indicates an [L] state (transistor is ON) while the propeller is rotating, changing to an [H] state (transistor is OFF) less than five seconds after the propeller stops rotating. The propeller automatically restarts operation within five seconds when the lock is unlocked. ([H] → [L] 5 s). If the pull-up voltage is live, the [H] state (transistor is OFF) will engage in less than five seconds, even when the power is turned off.

● Specification: V_{CE} = 28 V max
(55.2 V max for 48 V products)
IC = 5 mA max
($V_{CE\,(SAT)}$ = 0.4 V max)

● Output waveform

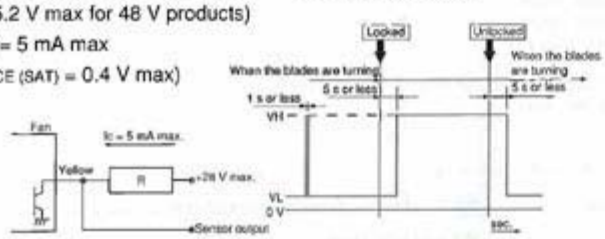

※When the power is turned on, the state sometimes becomes high [H] for several hundred ms.

2. Pulse output type (Product code: P)

A rectangular wave of two pulses will be output for each turn of the propeller while the propeller is rotating, outputting two types of signal depending on the propeller position when the propeller is locked. (See the note below ※)

● Specification: V_{CE} = 28 V max
(55.2 V max for 48 V products)
IC = 5 mA max
($V_{CE\,(SAT)}$ = 0.4 V max)

● Output waveform

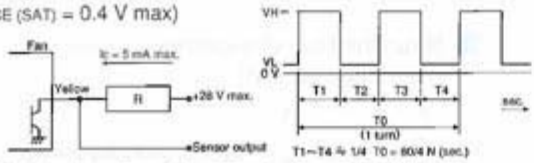

※Output signal waveform when the fan is stopped: The following two types of waveform are output, depending on the blade position when the propeller is stopped:
Pulse outputs of High - constant or restart timing (0.05 Hz to 2 Hz).

3. Speed detection type (Product code: Q)

The output signal indicates the [H] state when the propeller revolutions are slower than the preset speed, changing to the [L] state when the propeller revolutions exceed the reset speed.
[Products with a reversed output waveform are also available, suitable for a wired OR connection when several fans are installed. Contact Japan Servo for further information. (Former code: SQ, new code (15 - digit code products): R)]

● Specification: V_{CE} = 28 V max
(55.2 V max for 48 V products)
IC = 5 mA max
($V_{CE\,(SAT)}$ = 0.4 V max at 5 mA)

● Output waveform

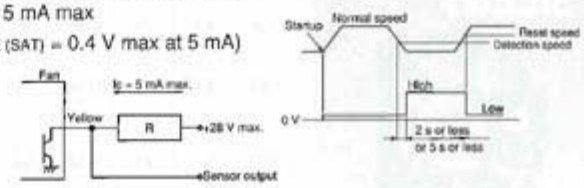

Note: The output waveform for type SQ (R) will be reversed.
The speed setting for the alarm output is about half the rated speed.
For more detailed information, please request a product delivery specification from Japan Servo.

AC fans with sensors

By equipping the motor with a rotation detection function, the AC fans of Japan Servo have a system to send an alarm signal when the fan motor revolutions slow down and to cut off the system power supply. In 1980, Japan Servo developed a system to output an alarm signal by detecting the lowering of generated voltage by installing a tachometer generator with the cooling fan and this system has since been incorporated in Japan Servo products. The output type of the alarm signal is an open collector output.

■ Sensor specification

Type	Tachometer generator type			
Sensor output operation	Open collector transistor, permissible sync Current: 50 mA max. Permissible imposed voltage: DC 40 V max. Permissible power consumption: 1.5 W max. (at 25 ℃)			
Sensor output operation	AC power supply	Speed	Output transistor operation	Output state
	OFF		OPEN	HIGH (Abnormal)
	ON	Below detection speed	OPEN	HIGH (Abnormal)
	ON	Above detection speed	CLOSE	LOW (Normal)
Detection speed RD	1500 ~ 2200 rpm			
Detection delay time TD	2 s or less 17 Type			
Type	Standard speed			
Insulation resistance	10 M Ω or higher by a DC 500 V: Between the sensor lead and venturi			
Dielectric strength	Between the sensor lead and venturi		No anomaly allowed after applying AC 500 V 50 Hz for 1 minute	

■ Operational and handling precautions

Operate fans and blowers at an ambient temperature of between -10 °C and 60 °C and relative humidity of less than 90 %. Latch output is not used so malfunction by electrical noise can be ruled out. However, note that the semiconductor devices in the internal circuitry may be damaged by electrical noise and high voltage. No delay circuit is provided so a trouble signal is output on startup. As when operating and handling the fan, exercise caution to avoid dropping and exposing the blower to shock and vibration.

■ Sensor connection

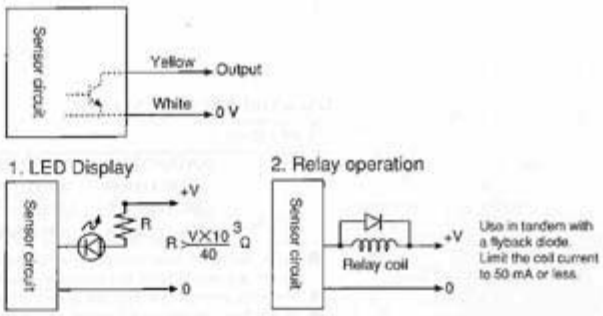

※ A sensor is available with the AS ad PL series only.