2-Phase Hybrid Stepping Motor
KV28 Series

KV28

1.8°/step
□28mm

Bi-Polar

■Applications

FA , Medical Devices
Security equipment

SINGLE SHAFT

MODEL
KV2832-N2B951
KV2841-N2B951
KV2851-N2B951

OPTION

KV28LBS300

■FEATURES

● Space saving

■SPECIFICATIONS

STEP ANGLE ° /step	VOLTAGE V	CURRENT A/PHASE	WINDING RESISTANCE Ω/PHASE	INDUCTANCE mH/PHASE	HOLDING TORQUE mN・m	ROTOR INERTIA g・cm²	MODEL
1.8	1.95	1.5	1.3	0.9	85	9.2	KV2832-N2B951
1.8	2.55	1.5	1.7	1.0	120	15	KV2841-N2B951
1.8	3.15	1.5	2.1	1.7	165	22	KV2851-N2B951

[GENERAL SPECIFICATIONS]

INSULATION RESISTANCE	500V DC 100MΩ min.(at normal temp.& humidity,between lead and case)
DIELECTRIC STRENGTH	500V AC 50Hz 1min.(at normal temp.& humidity,between lead and case)
AMBIENT TEMP. AND HUMIDITY	-10℃～+50℃、5%～95%RH(noncondensing)
STORAGE TEMP.AND HUMIDITY	-20℃～+70℃、5%～95%RH(noncondensing)
TEMPERATURE. RISE	80K max(By resistance method)
POSITION ACCURACY	±10%

■SPEED-TORQUE CHARACTERISTICS

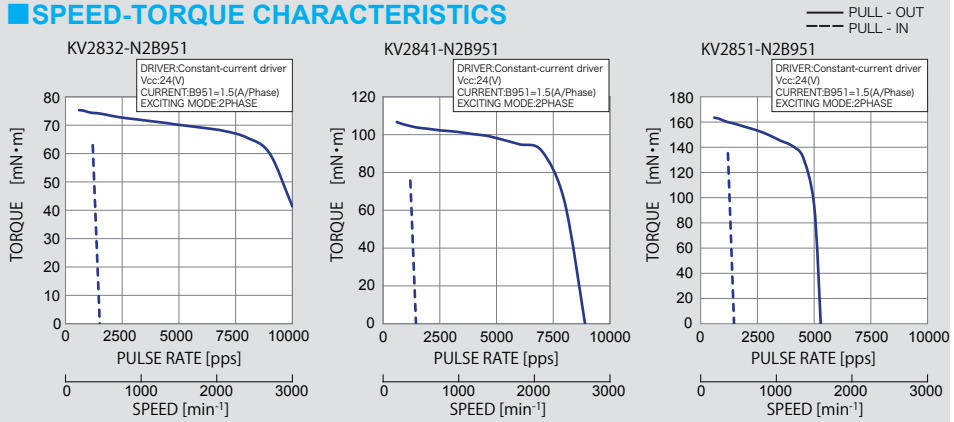

■CONNECTION DIAGRAMS

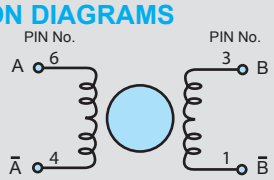

51065-06000 (PIN NO.)	6	4	3	1
PHASE	A	Ā	B	B̄
COLOR OF LEAD	RED	BLUE	YELLOW	WHITE

CW viewed from rotor shaft when using the following sequence diagram.

EXCIATION SEQUENCE

PHASE	1	2	3	4
6 (A)	−	+	+	−
3 (B)	−	−	+	+
4 (Ā)	+	−	−	+
1 (B̄)	+	+	−	−

■DIMENSIONS

Unit = mm(inch)

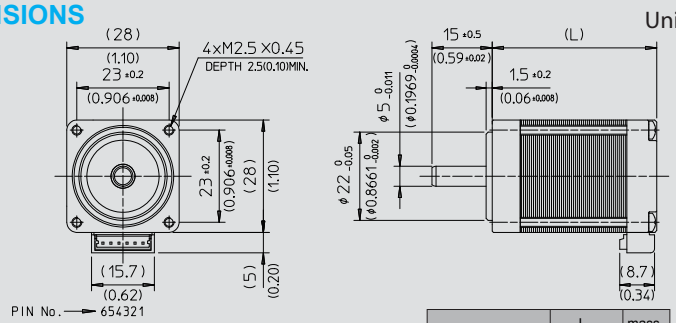

MODEL	L mm(inch)	mass g
KV2832-N2B951	32(1.26)	110
KV2841-N2B951	41(1.61)	140
KV2851-N2B951	51(2.01)	190

■OPTION (Leadwire Assembly)

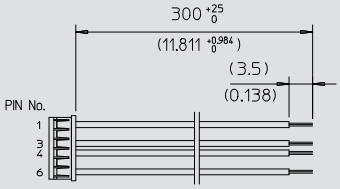

The KV28 motor is supplied without a leadwire assembly.
This must be ordered as a separate part.

■CONNECTOR SPECIFICATIONS

Maker	MOLEX
Applicable Housing	51065-0600
Applicable Terminal	50372-8000
Lead Wire	UL3266 AWG26